Current part is item (69) on diagram. Available at www.oshkoshequipment.com

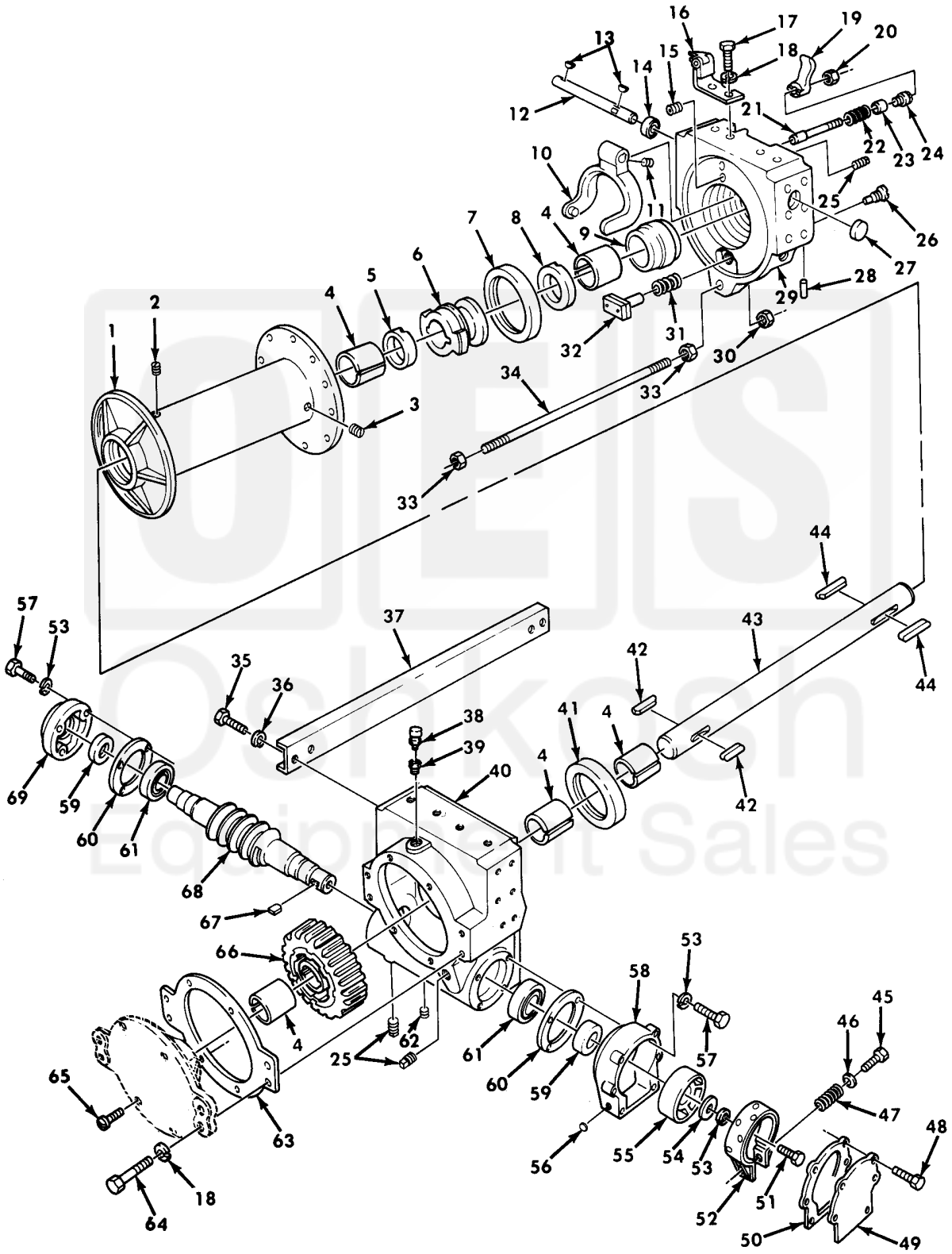

Figure 368. Winch Assembly, Basic, Drum, and Related Parts.

Current part is item (69) on diagram. Available at www.oshkoshequipment.com

Current part is item (69) on diagram. Available at www.oshkoshequipment.com

(1) ITEM NO	(2) SMR CODE	(3) NSN	(4) CAGEC	(5) PART NUMBER	(6) DESCRIPTION AND USABLE ON CODE (UOC)	(7) QTY
					634,637	
62	PAFZZ	4730-00-018-9566	81348	WW-P-471ACABCA	PLUG,PIPE..... UOC:614,620,621,622,623,625,628,633, 634,637	1
63	PAFZZ	5330-00-740-9821	19207	7409821	GASKET..... UOC:614,620,621,622,623,625,628,633, 634,637	1
64	PAFZZ	5306-00-740-9803	19207	7409803	BOLT,MACHINE WINCH ASSEMBLY..... UOC:614,620,621,622,623,625,628,633, 634,637	8
65	PAFZZ	5305-00-958-5267	96906	MS35190-343	SCREW,MACHINE GEAR CASE COVER..... UOC:614,620,621,622,623,625,628,633, 634,637	4
66	PAFZZ	3020-00-740-9823	19207	7409823	GEAR,WORM WHEEL WINCH ASSEMBLY..... UOC:614,620,621,622,623,625,628,633, 634,637	1
67	PAFZZ	5315-00-042-3293	96906	MS20067-270	KEY,MACHINE..... UOC:614,620,621,622,623,625,628,633, 634,637	1
68	PAFZZ	3040-00-231-0219	19207	7954478	WORM SHAFT..... UOC:614,620,621,622,623,625,628,633, 634,637	1
69	PAFZZ	3110-00-740-9809	19207	7409809	PLATE,RETAINING,BEA..... UOC:614,620,621,622,623,625,628,633, 634,637	1

END OF FIGURE

Current part is item (69) on diagram. Available at www.oshkoshequipment.com